ORSAN TİCARİ ARAÇ FREN SİSTEMLERİ A.Ş.
Türkgücü OSB Mah. Yılmaz Alpaslan Cad. No:69/1 Çorlu 59850 Tekirdağ / TURKEY
Tel : +90 282 681 84 00 (9 hat) Fax : +90 282 681 84 14-15
e-mail: info@orsantr.com
www.orsantr.com

Graphic Symbol

DIN ISO 1219

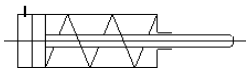

DİSK İMDATLI FREN KÖRÜĞÜ / DISC SPRING BRAKE

T 12/16 - DP DISC

Operation:

Service Brake Side (11): The pressured air which placed in the vehicle's air system goes inside from brake chamber and forces to push the brake diaphragm. As an affect of this process, force is created by piston plates and this force is transffered by brake's control lever. Braking systems is working at the end of this process. When the pressured air transffered to the atmosphere from brake chamber, return spring goes back to it's first state.

Park Brake Side (12): When the pressured air removed from this room,
spring pushes the diaphragm and braking happens. When the air pumped, the spring becomes squeezed and braking is releasing.

Technical Features:

		11	12
Operation Pressure	:	10 bar	8,5 Bar
Temperature Range	:	- 40 ºC +80 ºC	
Medium	:	Air	
Control Pressure Kontrol Basıncı	:	13 bar	10 bar
Permissible Leakage Müsaade Ediilen Kaçak	:	10 cm^3/dk	

Dimensions and Service Diaphragm Force Output:

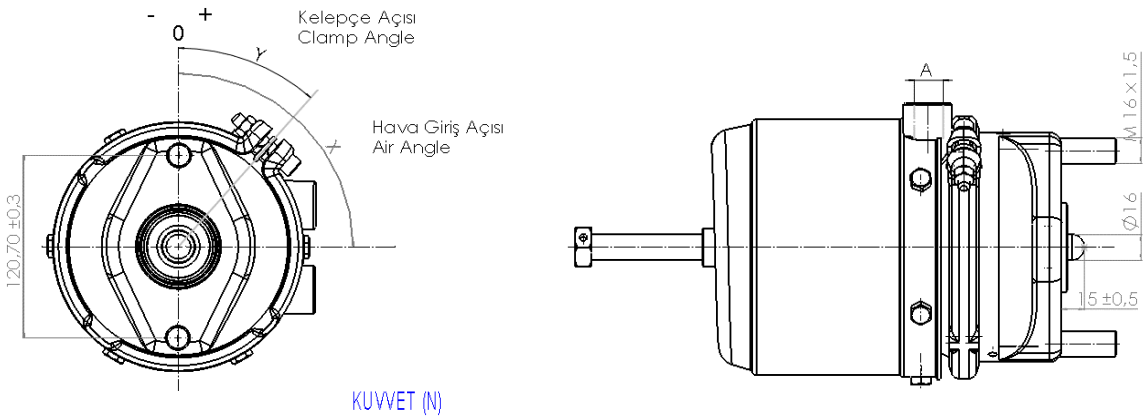

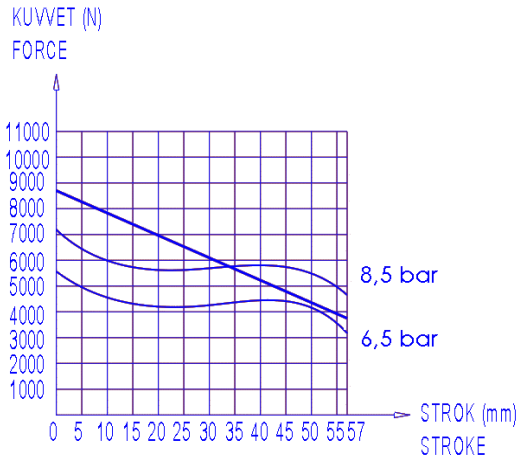

FIG. 1

ORSAN TİCARİ ARAÇ FREN SİSTEMLERİ A.Ş.
Türkgücü OSB Mah. Yılmaz Alpaslan Cad. No:69/1 Çorlu 59850 Tekirdağ / TURKEY
Tel : +90 282 681 84 00 (9 hat) Fax : +90 282 681 84 14-15
e-mail: info@orsantr.com
www.orsantr.com

Graphic Symbol

DIN ISO 1219

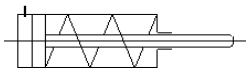

DİSK İMDATLI FREN KÖRÜĞÜ / DISC SPRING BRAKE

T 12/16 - DP DISC

STROKE 57 /57 mm IBV
FIG. 1

ORSAN CODE	WABCO CODE	KNORR CODE	OEM	X	Y	Fig.	ŞAFT PUSH ROD (Length)	HAVA GİRİŞ / AIR PORT			
								A (11)	A (12)		
35121601	925 486 1100		AO214202618 MB	+ 60°	- 35°	1	15	M22x1,5	M22x1,5		
			13C3508394AA OTOKAR								
35121602	925 486 1110		A0214202718 MB	- 60°	+ 35°	1	15	M22x1,5	M22x1,5		
			13C3508392AA OTOKAR								
35121603	925 486 1010 925 486 1060 925 486 1000		AO214200118 MB AO194204718 MB AO154201418 MB	0	- 135°	1	15	M22x1,5	M22x1,5		
35121604	925 486 1030 925 486 1080		AO164207218 AO194204818	+ 27°	- 90°	1	15	M22x1,5	M22x1,5		

ORSAN TİCARİ ARAÇ FREN SİSTEMLERİ A.Ş.
Türkgücü OSB Mah. Yılmaz Alpaslan Cad. No:69/1 Çorlu 59850 Tekirdağ / TURKEY
Tel : +90 282 681 84 00 (9 hat) Fax : +90 282 681 84 14-15
e-mail: info@orsantr.com
www.orsantr.com

Graphic Symbol

DIN ISO 1219

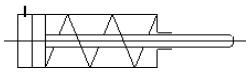

DİSK İMDATLI FREN KÖRÜĞÜ / DISC SPRING BRAKE

T 14/16 - DP DISC

Operation:

Service Brake Side (11): The pressured air which placed in the vehicle's air system goes inside from brake chamber and forces to push the brake diaphragm. As an affect of this process, force is created by piston plates and this force is transffered by brake's control lever. Braking systems is working at the end of this process. When the pressured air transffered to the atmosphere from brake chamber, return spring goes back to it's first state.

Park Brake Side (12): When the pressured air removed from this room,
spring pushes the diaphragm and braking happens. When the air pumped, the spring becomes squeezed and braking is releasing.

Technical Features:

		11	12
Operation Pressure	:	10 bar	8,5 Bar
Temperature Range	:	- 40 ºC +80 ºC	
Medium	:	Air	
Control Pressure Kontrol Basıncı	:	13 bar	10 bar
Permissible Leakage Müsaade Ediilen Kaçak	:	10 cm^3/dk	

Dimensions and Service Diaphragm Force Output:

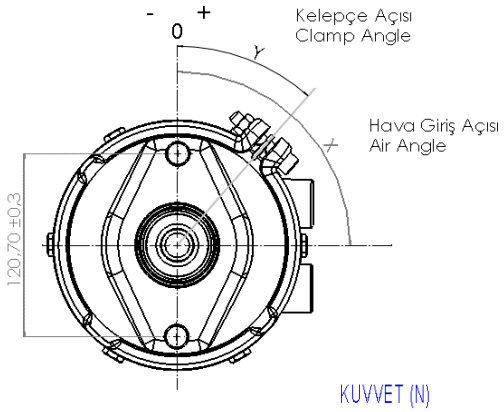

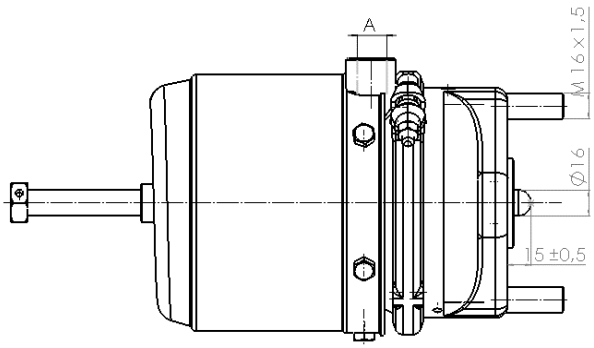

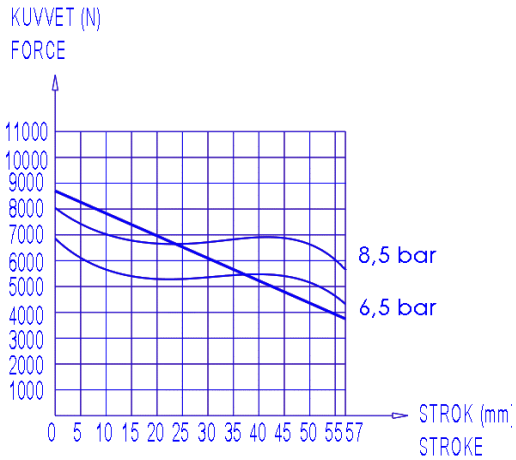

FIG. 1

ORSAN TİCARİ ARAÇ FREN SİSTEMLERİ A.Ş.
Türkgücü OSB Mah. Yılmaz Alpaslan Cad. No:69/1 Çorlu 59850 Tekirdağ / TURKEY
Tel : +90 282 681 84 00 (9 hat) Fax : +90 282 681 84 14-15
e-mail: info@orsantr.com
www.orsantr.com

Graphic Symbol

DIN ISO 1219

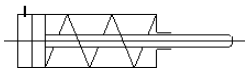

DİSK İMDATLI FREN KÖRÜĞÜ / DISC SPRING BRAKE

T 14/16 - DP DISC

STROKE 57 /57 mm IBV
FIG. 1

ORSAN CODE	WABCO CODE	KNORR CODE	OEM	X	Y	Fig.	ŞAFT PUSH ROD (Length)	HAVA GİRİŞ / AIR PORT			
								A (11)	A (12)		
35141610	925 468 1400		658859 A.DENNIS	- 60°	- 100°	1	15	M16x1,5	M16x1,5		
35141611	926 468 1410		658860 A.DENNIS	+ 60°	+ 100°	1	15	M16x1,5	M16x1,5		
35141612	925 426 3000		1523960 DAF	- 90°	- 150°	1	15	M22x1,5	M22x1,5		
			5010422317 RENAULT								
35141613	925 426 3010		5010422318 RENAULT	+ 90°	+ 150°	1	15	M22x1,5	M22x1,5		
			445332074 LEYLAND								

ORSAN TİCARİ ARAÇ FREN SİSTEMLERİ A.Ş.
Türkgücü OSB Mah. Yılmaz Alpaslan Cad. No:69/1 Çorlu 59850 Tekirdağ / TURKEY
Tel : +90 282 681 84 00 (9 hat) Fax : +90 282 681 84 14-15
e-mail: info@orsantr.com
www.orsantr.com

Graphic Symbol

DIN ISO 1219

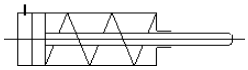

DİSK İMDATLI FREN KÖRÜĞÜ / DISC SPRING BRAKE

T 16/16 - DP DISC

Operation:

Service Brake Side (11): The pressured air which placed in the vehicle's air system goes inside from brake chamber and forces to push the brake diaphragm. As an affect of this process, force is created by piston plates and this force is transffered by brake's control lever. Braking systems is working at the end of this process. When the pressured air transffered to the atmosphere from brake chamber, return spring goes back to it's first state.

Park Brake Side (12): When the pressured air removed from this room,
spring pushes the diaphragm and braking happens. When the air pumped, the spring becomes squeezed and braking is releasing.

Technical Features:

		11	12
Operation Pressure	:	10 bar	8,5 Bar
Temperature Range	:	- 40 ºC +80 ºC	
Medium	:	Air	
Control Pressure Kontrol Basıncı	:	13 bar	10 bar
Permissible Leakage Müsaade Ediilen Kaçak	:	10 cm^3/dk	

Dimensions and Service Diaphragm Force Output:

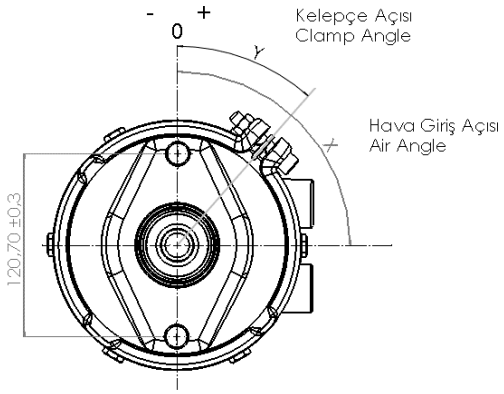

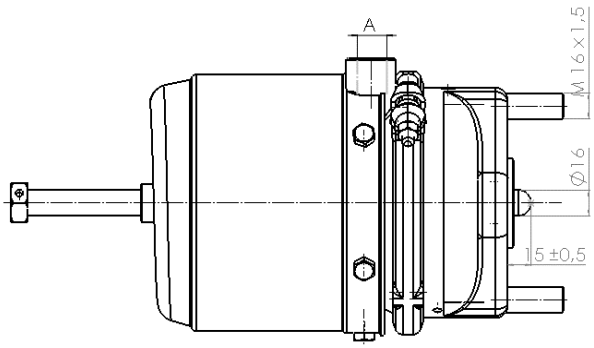

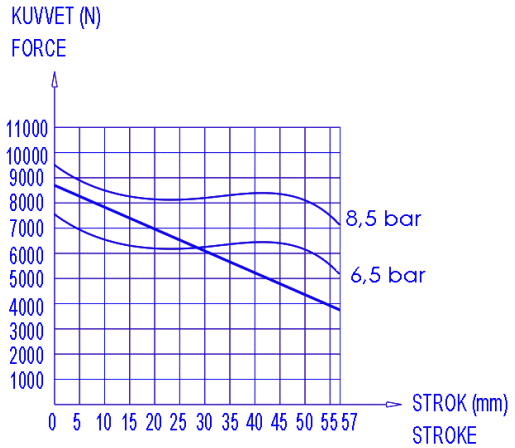

FIG. 1

ORSAN TİCARİ ARAÇ FREN SİSTEMLERİ A.Ş.
Türkgücü OSB Mah. Yılmaz Alpaslan Cad. No:69/1 Çorlu 59850 Tekirdağ / TURKEY
Tel : +90 282 681 84 00 (9 hat) Fax : +90 282 681 84 14-15
e-mail: info@orsantr.com
www.orsantr.com

Graphic Symbol

DIN ISO 1219

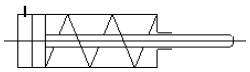

DİSK İMDATLI FREN KÖRÜĞÜ / DISC SPRING BRAKE

T 16/16 - DP DISC

STROKE 57 /57 mm IBV
FIG. 1

ORSAN CODE	WABCO CODE	KNORR CODE	OEM	X	Y	Fig.	ŞAFT PUSH ROD (Length)	HAVA GİRİŞ / AIR PORT		OEM
								A (11)	A (12)	
35161615	925 424 8000	BS9396	81504109739 MAN	- 90°	- 150°	1	15	M22x1,5	M22x1,5	81504106583 MAN
			81504106581 MAN							1505435 DAF
			8150416583 MAN							500337674 IVECO
			81504109583 MAN							5010422319 RENAULT
			81504106739 MAN							443219X600 NISSAN
35161616	925 464 4500	BS9397	A0174208818 MB	- 45°	+ 90°	1	15	M16x1,5	M16x1,5	336679 KÖGEL
			0174208818 MB							A3A827201 FRUEHAUF
			1505447 DAF							58128670 KRONE
			0203278600 BPW							5812867 KRONE

ORSAN TİCARİ ARAÇ FREN SİSTEMLERİ A.Ş.
Türkgücü OSB Mah. Yılmaz Alpaslan Cad. No:69/1 Çorlu 59850 Tekirdağ / TURKEY
Tel : +90 282 681 84 00 (9 hat) Fax : +90 282 681 84 14-15
e-mail: info@orsantr.com
www.orsantr.com

Graphic Symbol

DIN ISO 1219

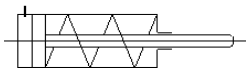

DİSK İMDATLI FREN KÖRÜĞÜ / DISC SPRING BRAKE

T 16/16 - DP DISC

STROKE 57 /57 mm IBV
FIG. 1

ORSAN CODE	WABCO CODE	KNORR CODE	OEM	X	Y	Fig.	ŞAFT PUSH ROD (Length)	HAVA GİRİŞ / AIR PORT		OEM
								A (11)	A (12)	
35161617	925 464 4510	BS9390	A0174208918 MB	+ 45°	- 90°	1	15	M16x1,5	M16x1,5	M076162 FRUEHAUF
			0174208918 MB							A3A827202 FRUEHAUF
			0203278700 BPW							5812868 KRONE
			336681 KÖGEL							58128680 KRONE
35161618	925 486 4000		0154201618 MB	+ 90°	- 90°	1	15	M22x1,5	M22x1,5	
			0204207218 MB							
			A0204207218 MB							
35161619	925 486 4010		0154201518 MB	- 90°	+ 90°	1	15	M22x1,5	M22x1,5	
			0204207118 MB							
			A0204207118 MB							

ORSAN TİCARİ ARAÇ FREN SİSTEMLERİ A.Ş.
Türkgücü OSB Mah. Yılmaz Alpaslan Cad. No:69/1 Çorlu 59850 Tekirdağ / TURKEY
Tel : +90 282 681 84 00 (9 hat) Fax : +90 282 681 84 14-15
e-mail: info@orsantr.com
www.orsantr.com

Graphic Symbol

DIN ISO 1219

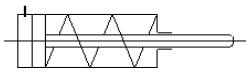

DİSK İMDATLI FREN KÖRÜĞÜ / DISC SPRING BRAKE

T 16/24 - DP DISC

Operation:

Service Brake Side (11): The pressured air which placed in the vehicle's air system goes inside from brake chamber and forces to push the brake diaphragm. As an affect of this process, force is created by piston plates and this force is transffered by brake's control lever. Braking systems is working at the end of this process. When the pressured air transffered to the atmosphere from brake chamber, return spring goes back to it's first state.

Park Brake Side (12): When the pressured air removed from this room,
spring pushes the diaphragm and braking happens. When the air pumped, the spring becomes squeezed and braking is releasing.

Technical Features:

		11	12
Operation Pressure	:	10 bar	8,5 Bar
Temperature Range	:	- 40 ºC +80 ºC	
Medium	:	Air	
Control Pressure Kontrol Basıncı	:	13 bar	10 bar
Permissible Leakage Müsaade Ediilen Kaçak	:	10 cm^3/dk	

Dimensions and Service Diaphragm Force Output:

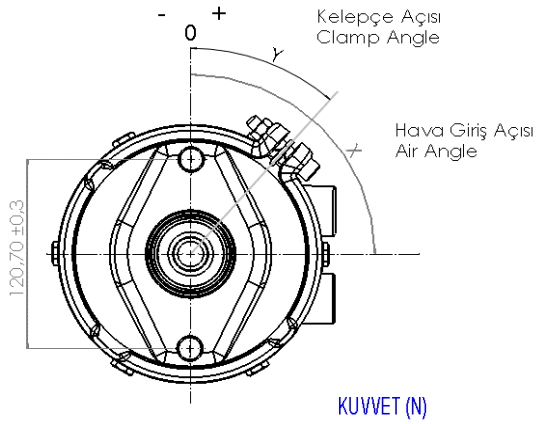

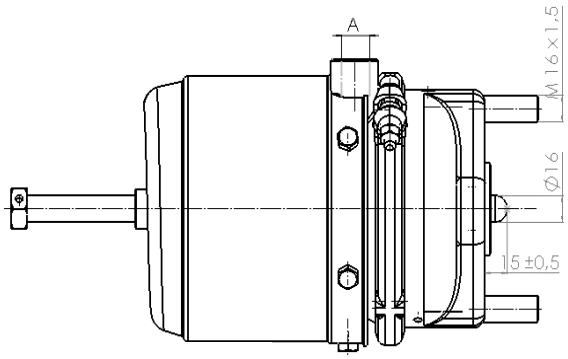

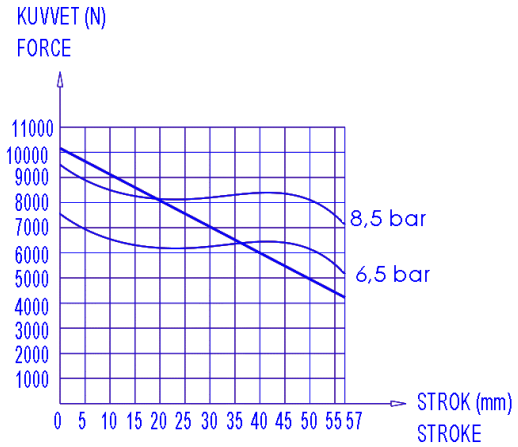

FIG. 1

ORSAN TİCARİ ARAÇ FREN SİSTEMLERİ A.Ş.
Türkgücü OSB Mah. Yılmaz Alpaslan Cad. No:69/1 Çorlu 59850 Tekirdağ / TURKEY
Tel : +90 282 681 84 00 (9 hat) Fax : +90 282 681 84 14-15
e-mail: info@orsantr.com
www.orsantr.com

Graphic Symbol

DIN ISO 1219

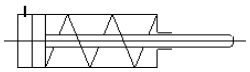

DİSK İMDATLI FREN KÖRÜĞÜ / DISC SPRING BRAKE

T 16/24 - DP DISC

STROKE 64 /64 mm
FIG. 1

ORSAN CODE	WABCO CODE	KNORR CODE	OEM	X	Y	Fig.	ŞAFT PUSH ROD (Length)	HAVA GİRİŞ / AIR PORT		OEM
								A (11)	A (12)	
901321-00508				+ 90°	180 °	1	15	M16x1,5	M16x1,5	
901321-00509				- 90°	180 °	1	15	M16x1,5	M16x1,5	

ORSAN TİCARİ ARAÇ FREN SİSTEMLERİ A.Ş.
Türkgücü OSB Mah. Yılmaz Alpaslan Cad. No:69/1 Çorlu 59850 Tekirdağ / TURKEY
Tel : +90 282 681 84 00 (9 hat) Fax : +90 282 681 84 14-15
e-mail: info@orsantr.com
www.orsantr.com

Graphic Symbol

DIN ISO 1219

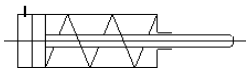

DİSK İMDATLI FREN KÖRÜĞÜ / DISC SPRING BRAKE

T 20/24 - DP DISC

Operation:

Service Brake Side (11): The pressured air which placed in the vehicle's air system goes inside from brake chamber and forces to push the brake diaphragm. As an affect of this process, force is created by piston plates and this force is transffered by brake's control lever. Braking systems is working at the end of this process. When the pressured air transffered to the atmosphere from brake chamber, return spring goes back to it's first state.

Park Brake Side (12): When the pressured air removed from this room,
spring pushes the diaphragm and braking happens. When the air pumped, the spring becomes squeezed and braking is releasing.

Technical Features:

Operation Pressure :	11 10 bar	12 8,5 Bar
Temperature Range :	- 40 ºC +80 ºC	
Medium :	Air	
Control Pressure Kontrol Basıncı :	11 13 bar	12 10 bar
Permissible Leakage Müsaade Ediilen Kaçak :	10 cm^3/dk	

Dimensions and Service Diaphragm Force Output:

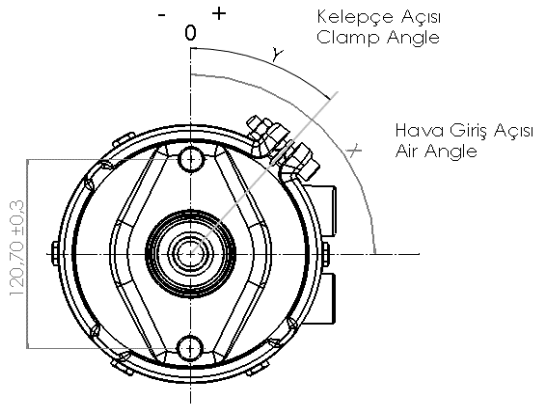

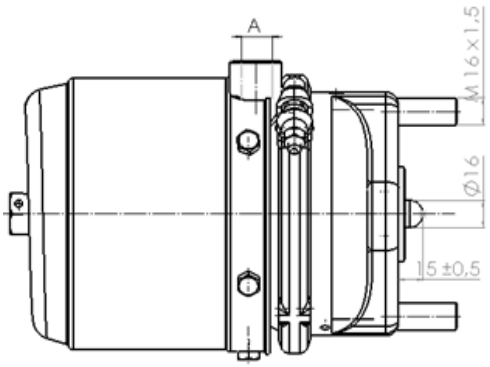

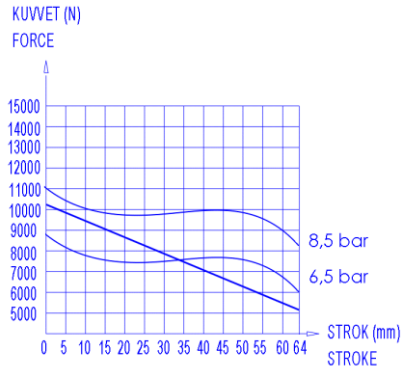

FIG. 1

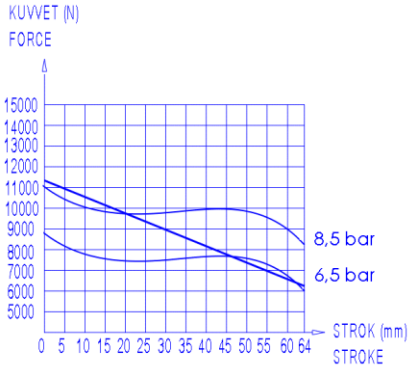

FIG. 2

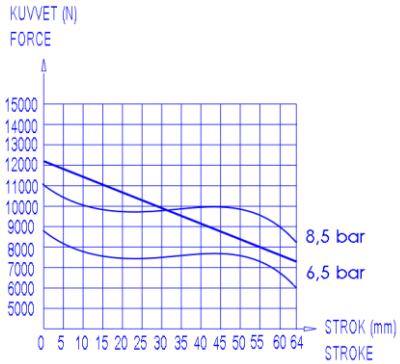

FIG.3

ORSAN TİCARİ ARAÇ FREN SİSTEMLERİ A.Ş.
Türkgücü OSB Mah. Yılmaz Alpaslan Cad. No:69/1 Çorlu 59850 Tekirdağ / TURKEY
Tel : +90 282 681 84 00 (9 hat) Fax : +90 282 681 84 14-15
e-mail: info@orsantr.com
www.orsantr.com

Graphic Symbol

DIN ISO 1219

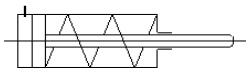

DİSK İMDATLI FREN KÖRÜĞÜ / DISC SPRING BRAKE

T 20/24 - DP DISC

STROKE 64 /64 mm - IBV -
FIG. 1

STROKE 64 /64 mm - IBV -
FIG.2 / 3

ORSAN CODE	WABCO CODE	KNORR CODE	OEM	X	Y	Fig.	ŞAFT PUSH ROD (Length)	HAVA GİRİŞ / AIR PORT		OEM
								A (11)	A (12)	
35202470	925 480 0100	BS9405	A0204203318 MB	- 27°	+ 90 °	1	15	M22x1,5	M22x1,5	
			A0154207518 MB							
35202471	925 480 0110	BS9406	A0204203418 MB	+ 27°	- 90 °	1	15	M22x1,5	M22x1,5	
			A0154207618 MB							
35202472	925 480 0120		0204203518 MB	- 45°	+ 90 °	1	15	M22x1,5	M22x1,5	
			A0204203518 MB							
35202473	925 480 0120		0204203618 MB	+ 45°	- 90 °	1	15	M22x1,5	M22x1,5	
			A0204203618 MB							

ORSAN TİCARİ ARAÇ FREN SİSTEMLERİ A.Ş.
Türkgücü OSB Mah. Yılmaz Alpaslan Cad. No:69/1 Çorlu 59850 Tekirdağ / TURKEY
Tel : +90 282 681 84 00 (9 hat) Fax : +90 282 681 84 14-15
e-mail: info@orsantr.com
www.orsantr.com

Graphic Symbol

DIN ISO 1219

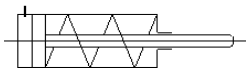

DİSK İMDATLI FREN KÖRÜĞÜ / DISC SPRING BRAKE

T 20/24 - DP DISC

STROKE 64 /64 mm - IBV -
FIG. 1

STROKE 64 /64 mm - IBV -
FIG.2 / 3

ORSAN CODE	WABCO CODE	KNORR CODE	OEM	X	Y	Fig.	ŞAFT PUSH ROD (Length)	HAVA GİRİŞ / AIR PORT		OEM
								A (11)	A (12)	
35202474	925 460 1010	BS9486	1519192 DAF	+ 45°	- 90 °	1	15	M16x1,5	M16x1,5	A0184205618 MB
			1935450 SCANIA							0184205618 MB
			0203276700 BPW							WA9254601010 VOLVO
35202452				- 90°	180 °	2	15	M16x1,5	M16x1,5	
35202453				+ 90°	180 °	2	15	M16x1,5	M16x1,5	
35202475				- 90°	180 °	3	15	M16x1,5	M16x1,5	
35202476				+ 90°	180 °	3	15	M16x1,5	M16x1,5	

ORSAN TİCARİ ARAÇ FREN SİSTEMLERİ A.Ş.
Türkgücü OSB Mah. Yılmaz Alpaslan Cad. No:69/1 Çorlu 59850 Tekirdağ / TURKEY
Tel : +90 282 681 84 00 (9 hat) Fax : +90 282 681 84 14-15
e-mail: info@orsantr.com
www.orsantr.com

Graphic Symbol

DIN ISO 1219

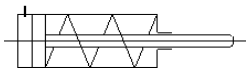

DİSK İMDATLI FREN KÖRÜĞÜ / DISC SPRING BRAKE

T 24/24 - DP DISC

Operation:

Service Brake Side (11): The pressured air which placed in the vehicle's air system goes inside from brake chamber and forces to push the brake diaphragm. As an affect of this process, force is created by piston plates and this force is transffered by brake's control lever. Braking systems is working at the end of this process. When the pressured air transffered to the atmosphere from brake chamber, return spring goes back to it's first state.

Park Brake Side (12): When the pressured air removed from this room,
spring pushes the diaphragm and braking happens. When the air pumped, the spring becomes squeezed and braking is releasing.

Technical Features:

		11	12
Operation Pressure	:	10 bar	8,5 Bar
Temperature Range	:	- 40 ºC +80 ºC	
Medium	:	Air	
Control Pressure Kontrol Basıncı	:	13 bar	10 bar
Permissible Leakage Müsaade Ediilen Kaçak	:	10 cm^3/dk	

Dimensions and Service Diaphragm Force Output:

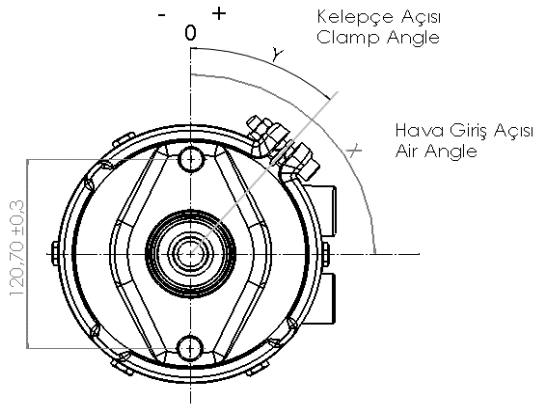

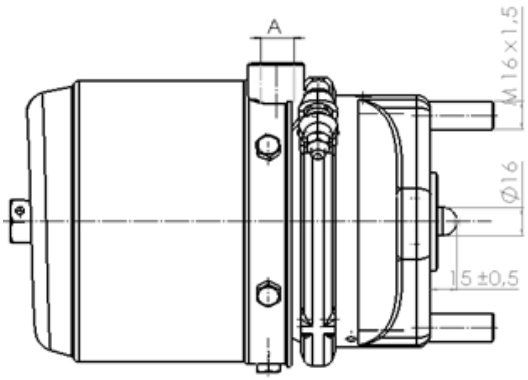

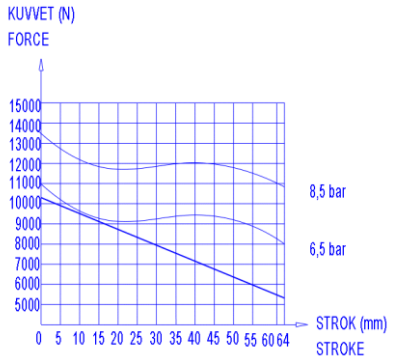

FIG. 1

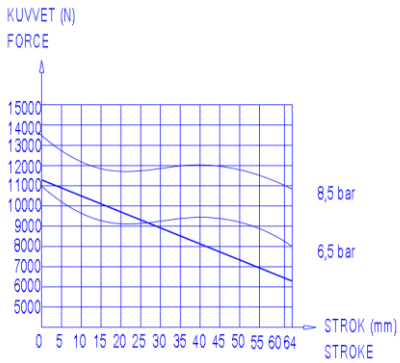

FIG. 2

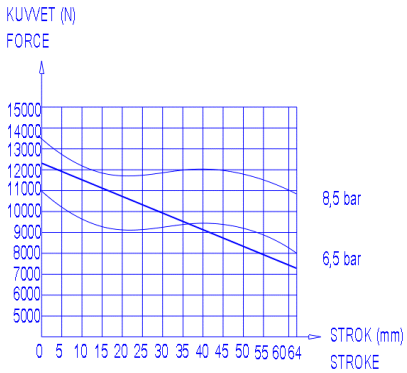

FIG.3

ORSAN TİCARİ ARAÇ FREN SİSTEMLERİ A.Ş.
Türkgücü OSB Mah. Yılmaz Alpaslan Cad. No:69/1 Çorlu 59850 Tekirdağ / TURKEY
Tel : +90 282 681 84 00 (9 hat) Fax : +90 282 681 84 14-15
e-mail: info@orsantr.com
www.orsantr.com

Graphic Symbol

DIN ISO 1219

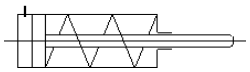

DİSK İMDATLI FREN KÖRÜĞÜ / DISC SPRING BRAKE

T 24/24 - DP DISC

STROKE 64 /64 mm - IBV -
FIG. 1

STROKE 64 /64 mm - IBV -
FIG.2 / 3

ORSAN CODE	WABCO CODE	KNORR CODE	OEM	X	Y	Fig.	ŞAFT PUSH ROD (Length)	HAVA GİRİŞ / AIR PORT		OEM
								A (11)	A (12)	
35242470	925 481 0100	BS9504	A0194205718 MB	- 27°	+ 90 °	1	15	M 22x1,5	M 22x1,5	0194206718 MB
	925 481 0120		A0154209318 MB							1519378 DAF
	925 481 0127		0154209318 MB							DONFENG
35242471	925 481 0110		A0154209218 MB	+ 27°	- 90 °	1	15	M 22x1,5	M 22x1,5	194206618 MB
	925 481 0130		154209218 MB							A0194205618 MB
			0154209818 MB							194205618 MB
35242472	925 461 0550			0°	- 90 °	1	15	M 22x1,5	M 22x1,5	
35242473				0°	- 90 °	2	15	M 22x1,5	M 22x1,5	
35242474				0°	- 90 °	3	15	M 22x1,5	M 22x1,5	

ORSAN TİCARİ ARAÇ FREN SİSTEMLERİ A.Ş.
Türkgücü OSB Mah. Yılmaz Alpaslan Cad. No:69/1 Çorlu 59850 Tekirdağ / TURKEY
Tel : +90 282 681 84 00 (9 hat) Fax : +90 282 681 84 14-15
e-mail: info@orsantr.com
www.orsantr.com

Graphic Symbol

DIN ISO 1219

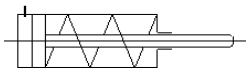

DİSK İMDATLI FREN KÖRÜĞÜ / DISC SPRING BRAKE

T 24/30 - DP DISC

Operation:

Service Brake Side (11): The pressured air which placed in the vehicle's air system goes inside from brake chamber and forces to push the brake diaphragm. As an affect of this process, force is created by piston plates and this force is transffered by brake's control lever. Braking systems is working at the end of this process. When the pressured air transffered to the atmosphere from brake chamber, return spring goes back to it's first state.

Park Brake Side (12): When the pressured air removed from this room,
spring pushes the diaphragm and braking happens. When the air pumped, the spring becomes squeezed and braking is releasing.

Technical Features:

		11	12
Operation Pressure	:	10 bar	8,5 Bar
Temperature Range	:	- 40 ºC +80 ºC	
Medium	:	Air	
Control Pressure Kontrol Basıncı	:	13 bar	10 bar
Permissible Leakage Müsaade Ediilen Kaçak	:	10 cm^3/dk	

Dimensions and Service Diaphragm Force Output:

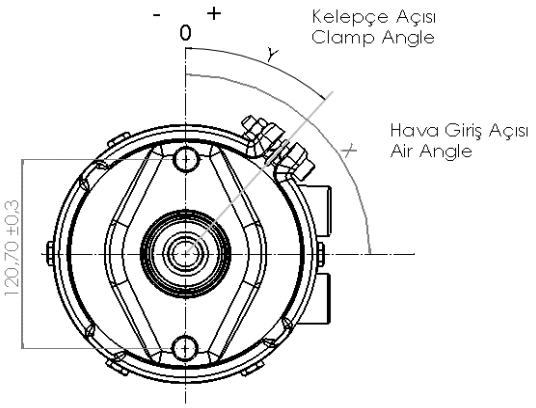

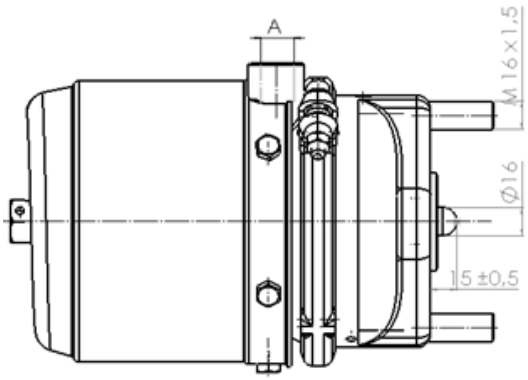

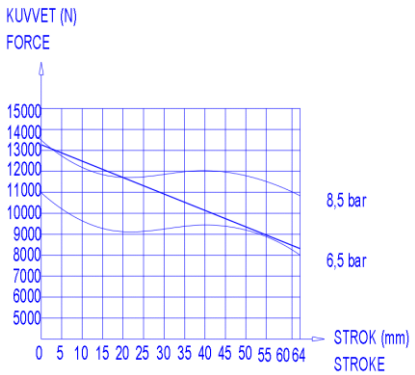

FIG. 1

ORSAN TİCARİ ARAÇ FREN SİSTEMLERİ A.Ş.
Türkgücü OSB Mah. Yılmaz Alpaslan Cad. No:69/1 Çorlu 59850 Tekirdağ / TURKEY
Tel : +90 282 681 84 00 (9 hat) Fax : +90 282 681 84 14-15
e-mail: info@orsantr.com
www.orsantr.com

Graphic Symbol

DIN ISO 1219

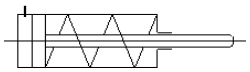

DİSK İMDATLI FREN KÖRÜĞÜ / DISC SPRING BRAKE

T 24/30 - DP DISC

STROKE 64 /64 mm - IBV -
FIG. 1

ORSAN CODE	WABCO CODE	KNORR CODE	OEM	X	Y	Fig.	ŞAFT PUSH ROD (Length)	HAVA GİRİŞ / AIR PORT		OEM
								A (11)	A (12)	
35243070	925 461 3210		1481538 SCANIA	+ 90°	+ 45 °	1	15	M 16x1,5	M 16x1,5	
35243071	925 461 3200		1481537 SCANIA	+ 90°	+ 45 °	1	15	M 16x1,5	M 16x1,5	

ORSAN TİCARİ ARAÇ FREN SİSTEMLERİ A.Ş.
Türkgücü OSB Mah. Yılmaz Alpaslan Cad. No:69/1 Çorlu 59850 Tekirdağ / TURKEY
Tel : +90 282 681 84 00 (9 hat) Fax : +90 282 681 84 14-15
e-mail: info@orsantr.com
www.orsantr.com

Graphic Symbol

DIN ISO 1219

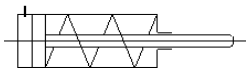

DİSK İMDATLI FREN KÖRÜĞÜ / DISC SPRING BRAKE

T 30/30 - DP DISC

Operation:

Service Brake Side (11): The pressured air which placed in the vehicle's air system goes inside from brake chamber and forces to push the brake diaphragm. As an affect of this process, force is created by piston plates and this force is transffered by brake's control lever. Braking systems is working at the end of this process. When the pressured air transffered to the atmosphere from brake chamber, return spring goes back to it's first state.

Park Brake Side (12): When the pressured air removed from this room,
spring pushes the diaphragm and braking happens. When the air pumped, the spring becomes squeezed and braking is releasing.

Technical Features:

		11	12
Operation Pressure	:	10 bar	8,5 Bar
Temperature Range	:	- 40 ºC +80 ºC	
Medium	:	Air	
Control Pressure Kontrol Basıncı	:	13 bar	10 bar
Permissible Leakage Müsaade Ediilen Kaçak	:	10 cm^3/dk	

Dimensions and Service Diaphragm Force Output:

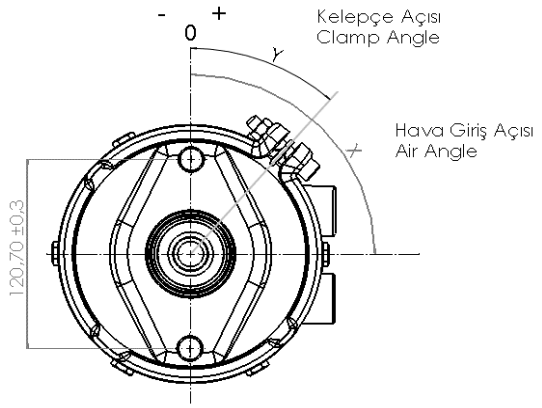

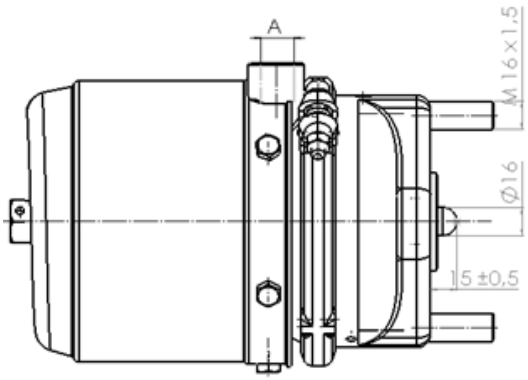

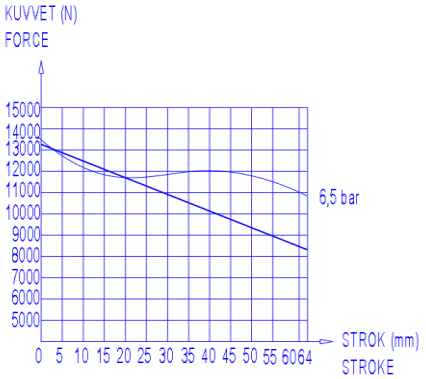

FIG. 1

ORSAN TİCARİ ARAÇ FREN SİSTEMLERİ A.Ş.
Türkgücü OSB Mah. Yılmaz Alpaslan Cad. No:69/1 Çorlu 59850 Tekirdağ / TURKEY
Tel : +90 282 681 84 00 (9 hat) Fax : +90 282 681 84 14-15
e-mail: info@orsantr.com
www.orsantr.com

Graphic Symbol

DIN ISO 1219

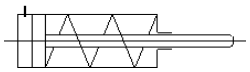

DİSK İMDATLI FREN KÖRÜĞÜ / DISC SPRING BRAKE

T 30/30 - DP DISC

STROKE 64 /64 mm - IBV -
FIG. 1

ORSAN CODE	WABCO CODE	KNORR CODE	OEM	X	Y	Fig.	ŞAFT PUSH ROD (Length)	HAVA GİRİŞ / AIR PORT		OEM
								A (11)	A (12)	
35303070				+ 90°	+ 45 °	1	15	M 16x1,5	M 16x1,5	